EEE2008

Project and Professional Issues

Dr Andrew Smith (ML); Graham Cole
andrew.smith@newcastle.ac.uk
graham.cole@newcastle.ac.uk

School of Engineering

Newcastle University

Overview

- 20 credit module:
  - 15 credits for engineering project work: 100% design work (led by Andrew Smith)
  - 5 credits for enterprise and professional issues (led by Graham Cole)

- Engineering (Project) Part - 11 weeks:
  - First week in computer lab - programming and circuit simulation
  - 10 x 3-hour sessions in EEE labs – practical circuit building / programming

- Enterprise/Professional Issues Part: - Graham Cole will discuss.

Engineering Course Aims / Learning Outcomes

To develop engineering skills through teamwork in a design-based project with particular emphasis upon the following features:-

- To develop the students' planning, research-led design, construction and communication skills through teamwork in a real engineering project.
- To assist students with project activities within their undergraduate studies and to enable them to fulfil their roles as future engineers.
- To provide insight into issues of ethical and sustainable design – with cost and ecosystem aware considerations.

Key Skills Use / Gain

- Circuit design and testing,
- Sensors,
- Group work,
- Hardware,
- Software,
- Control system,
- Energy awareness

What is the Project?

- Autonomous self-guided battery-powered vehicle which can follow a predefined track (e.g., logistics, driverless vehicles, autonomous driving).

- Works by inductively sensing a wire loop, carrying an AC current, which is buried beneath the flooring.

3 Main Subsystems:

1) Sensor subsystem.
2) Motor drive and steering subsystem.
3) Control subsystem with sensing and control interfaces.

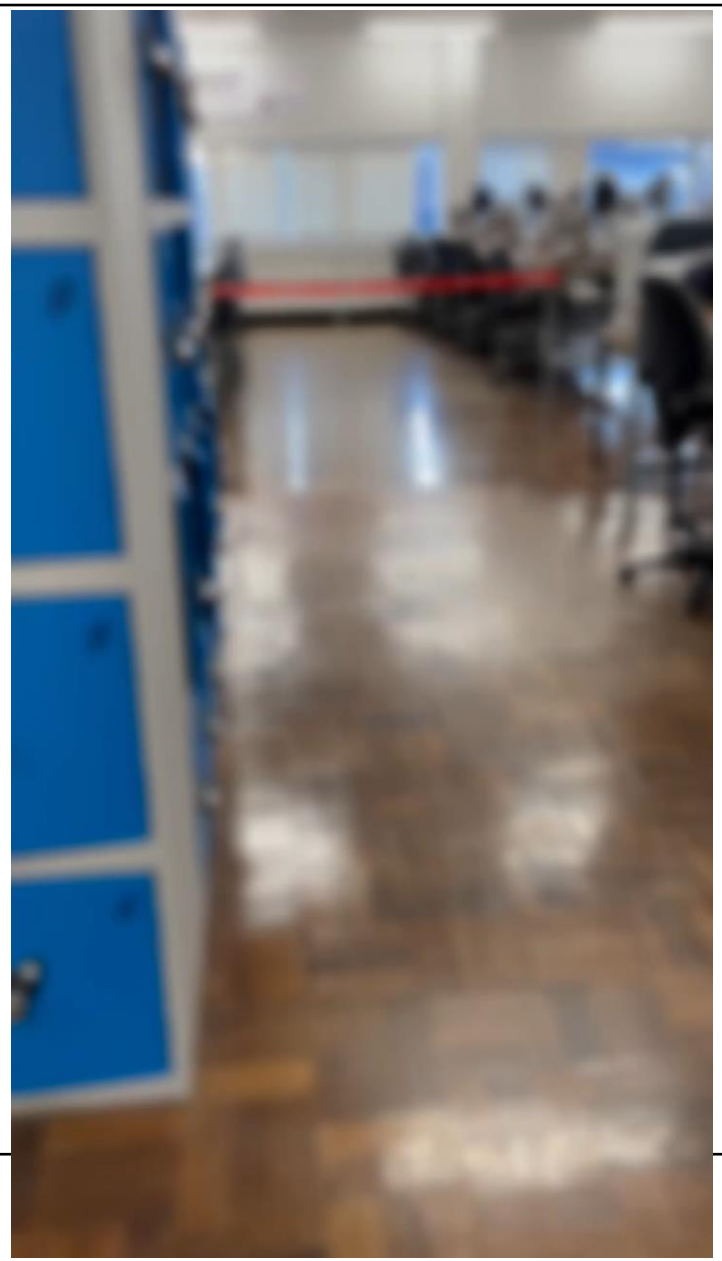

Relevance of Module - Sustainability

- World is going electric
- Electrical systems are more efficient than mechanical systems
- Motors, sensors, and control used everywhere – electric vehicles, wind turbines, etc…

Relevance of Module - Employability

- Again, the world is going electric…
- UK requires 25,000 electrical engineers a year

Main Sections

1) Sensor subsystem.

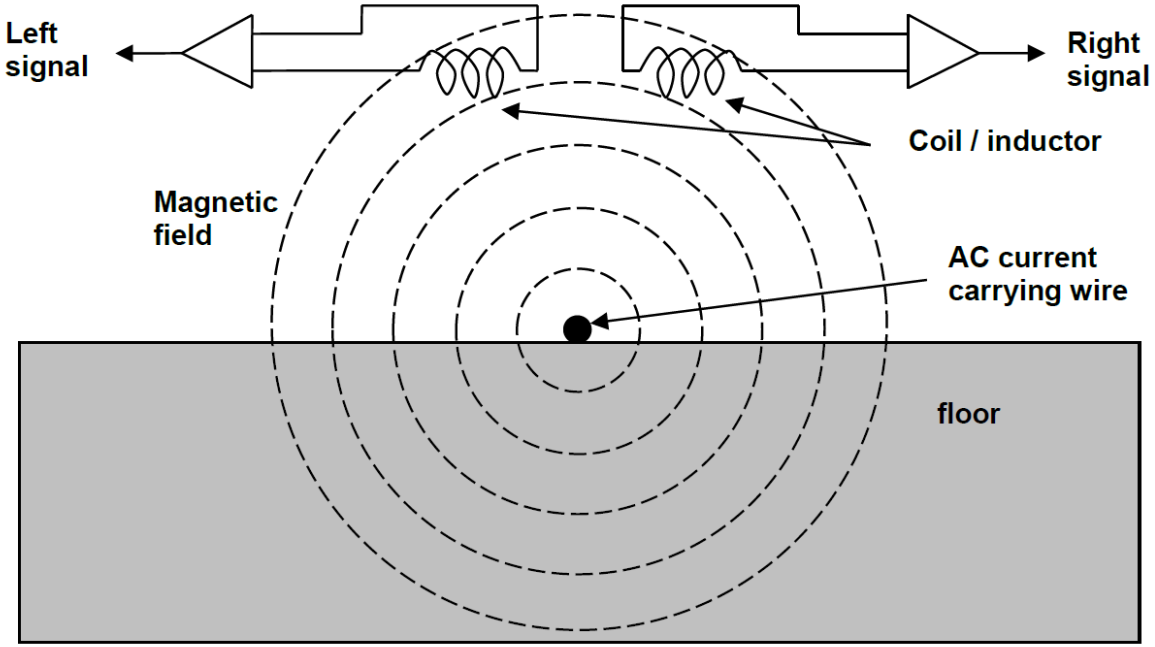

Faradays Law: $e = N\frac{d\phi}{dt}$

A wire carrying an AC current induces a voltage in a nearby coil. If two coils are placed side by side along the same axis, then by comparing the amplitude of the induced voltages you can deduce which way you need to steer a vehicle to follow the track

Main Sections

2) Motor drive and steering subsystem.

- Full bi-directional speed control for a motor can be achieved by controlling the pulse width modulation signal (PWM).

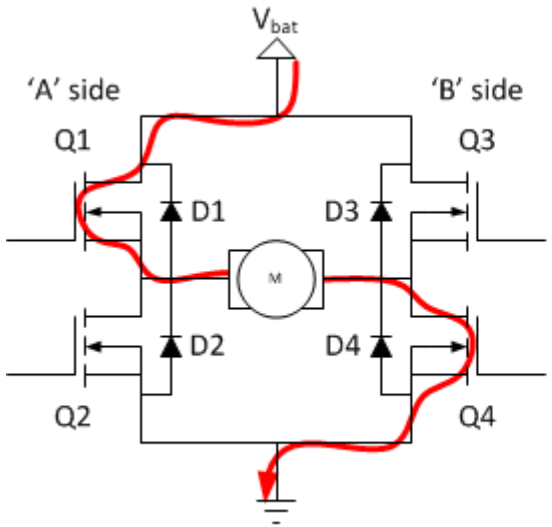

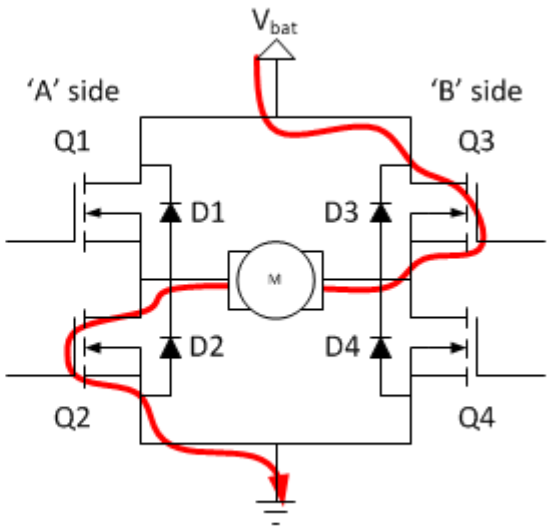

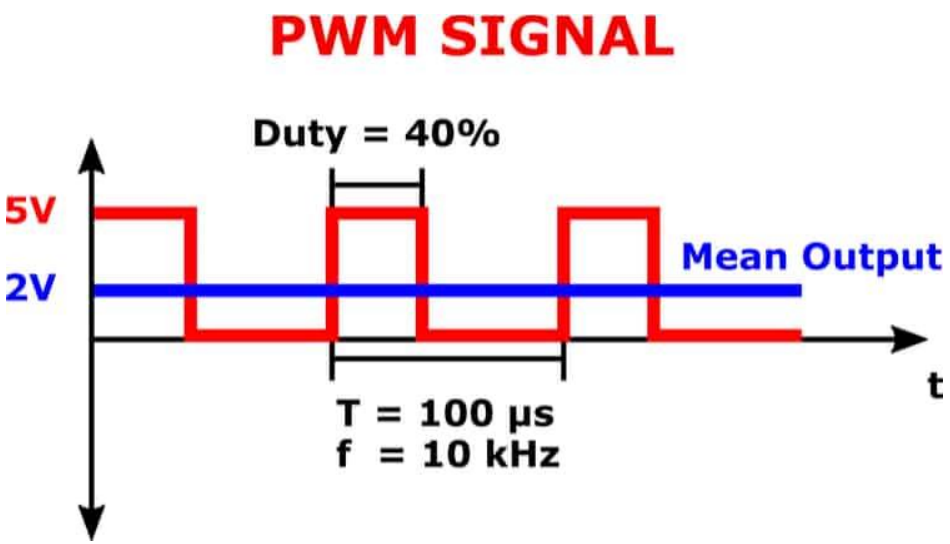

Main Sections

3) Control subsystem with sensing and control interfaces

Project will be using a Microchip PIC – why?

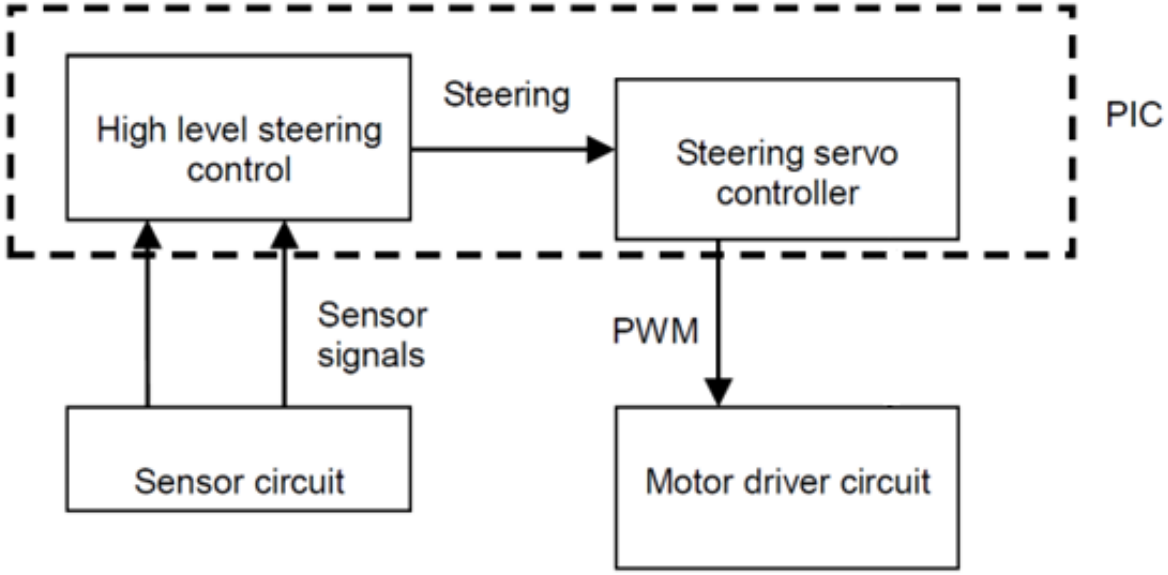

Cost?

Arduino Nano: £10-£22 +VAT

PIC16F18326: £1.28 +VAT

Additional Sections

4) Bluetooth Communications

5) Power Measurement – battery voltage and current

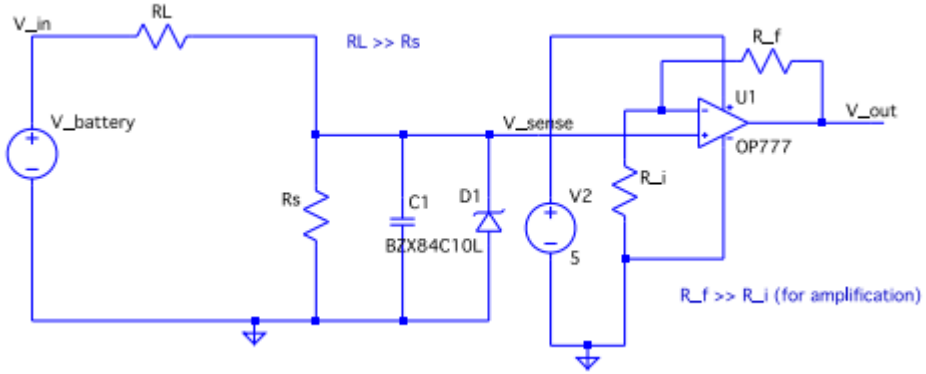

Time

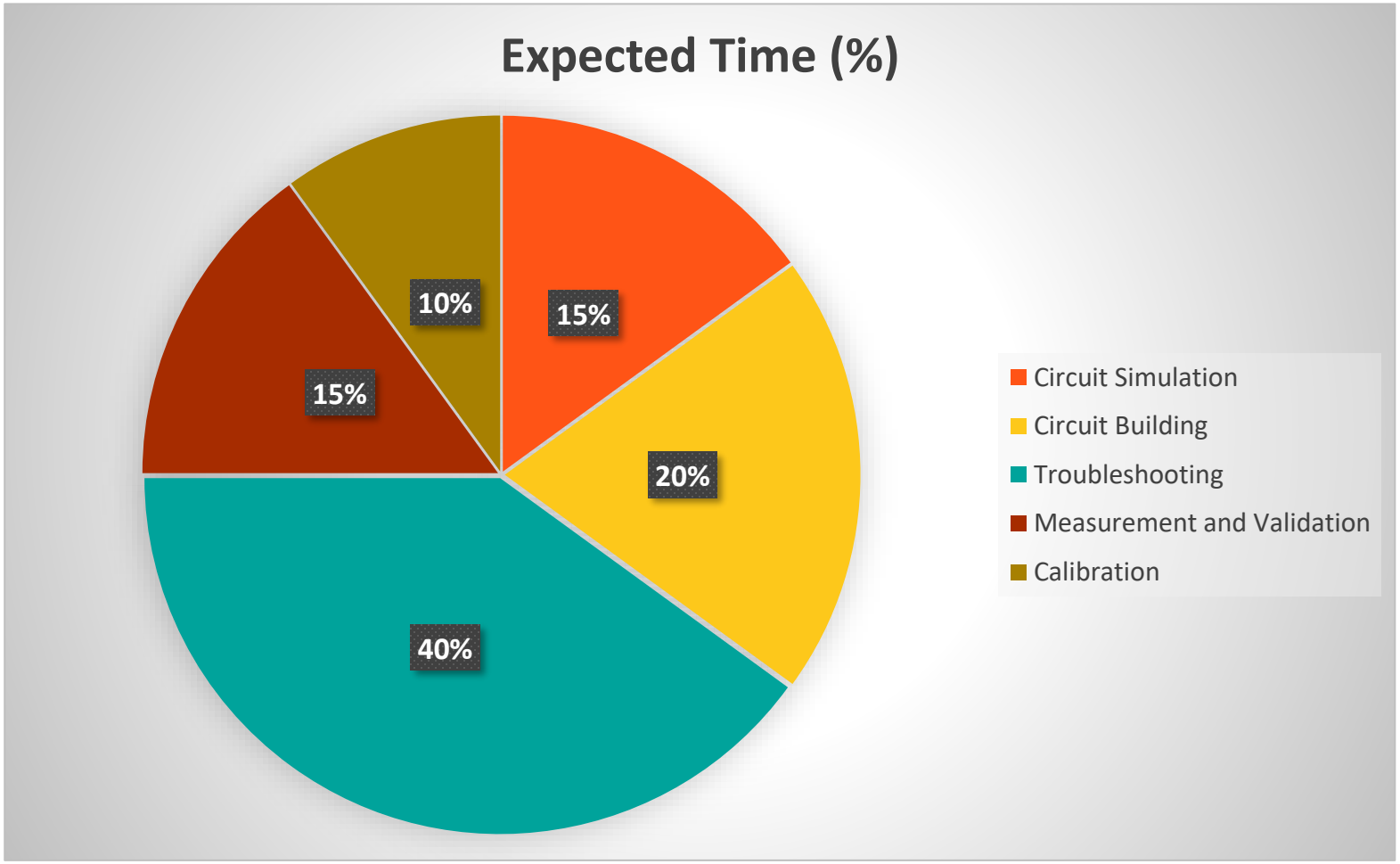
Expected Time (%)
15%
20%
40%
15%
10%
Circuit Simulation
Circuit Building
Troubleshooting
Measurement and Validation
Calibration

Teams

26 teams: normally 3 members in a team (allocated randomly)

- You will take on the project work as a team
- Individuals lead on one subsystem but contribute to all others evenly.
- Attendance will be monitored
- Persistent absence or non-communication from members – tell us sooner rather than later
- Record your week-by-week progress – helps you remember what you are doing

Remember: Teamwork not always easy – but this is what occurs in the real world

Academic Examiners

Timetable

Week	Activity
26/01/26	Introductory Lecture and Computer Session
02/02/26 - 09/03/26	EEE Practical Lab sessions
16/03/2026	EEE Practical Lab session and Individual Demonstration
23/03/26 – 13/04/26	Easter Break
20/04/2026	EEE Practical Lab session
27/04/2026	Two EEE Practical Lab sessions and Buggy Demo
04/05/2026	Final Race

Software used for Project

- MPLAB® X Integrated Development Environment (IDE)
- LTspice Circuit Simulator

} Free

- PIC Programmers (SNAP):
- Yours to borrow for the duration of EEE2008 - will be signed out to you
- Want them back in working condition at end of project!!

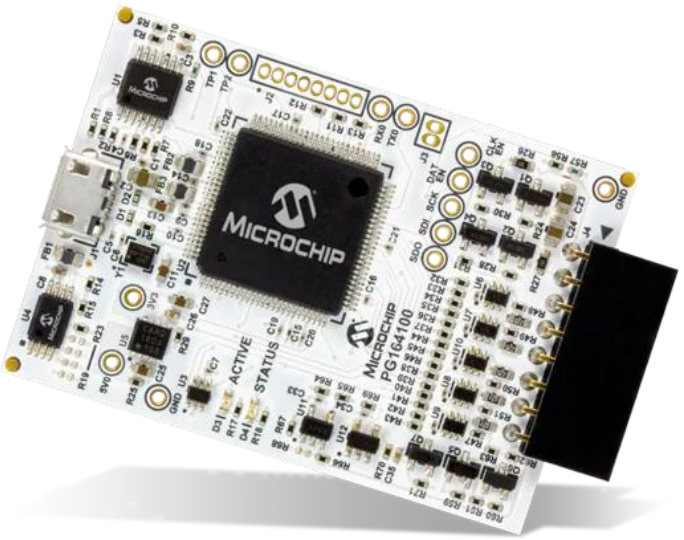

Assessment Information

Assessment	Deadline
System Demonstration 1: Individual Subsystem Demonstration (15 mins incl. questions) (18%)	Takes place by Friday 20th March 2026. Contact supervisors to arrange time
System Demonstration 2: Demonstration of no. of laps Buggy can complete within 75 seconds (17%)	Takes place on weeks of 20th and 27th April 2026. Contact module leader.
Business Final Report (3000 words) (25%)	1st May 2026, 14.00 UK Time
Buggy Final Report (4000 words) (40%)	8th May 2026, 14.00 UK Time

Assessment Information

Demonstration of no. of laps Buggy can complete within 75 seconds

- 100 % for 5 laps in 75 seconds
- 80 % for 4 laps in 75 seconds
- 60 % for 3 laps in 75 seconds
- 40 % for 2 laps in 75 seconds
- 20 % for 1 lap completed
- 0 % for no lap completed

Assessment Information

- Peer Observation will occur - scale your group marks

Final Race

- 5th May – 14:00-17:00
- Each team will be timed to complete two laps and the winner will be the fastest team.
- Groups will be called in random order for race
- Trophies

IMPORTANT - No Final Race participation; no Demo marks!!

Student feedback – Communications

- Questions relevant to the module - Discussion board in Canvas
- Ask me in the lab sessions
- Feedback through SSC or directly to Stage 2 Tutor (Dr David Greenwood) or the DPD (Dr Simon Lambert)

Any Questions?